VUE A

The exploded view shows more parts than really exist.

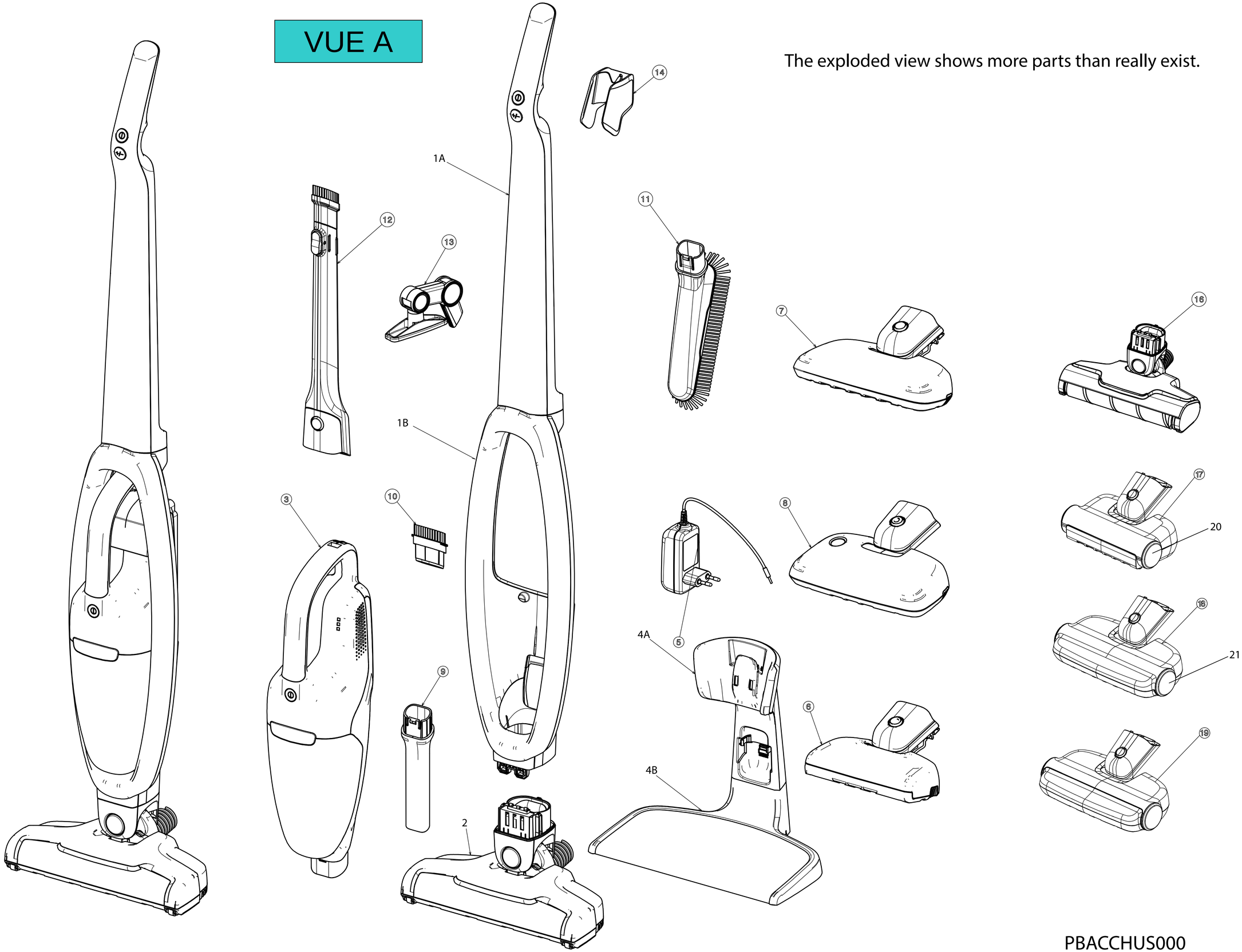

PBACCHUS000

The exploded view shows more parts than really exist.

VUE B

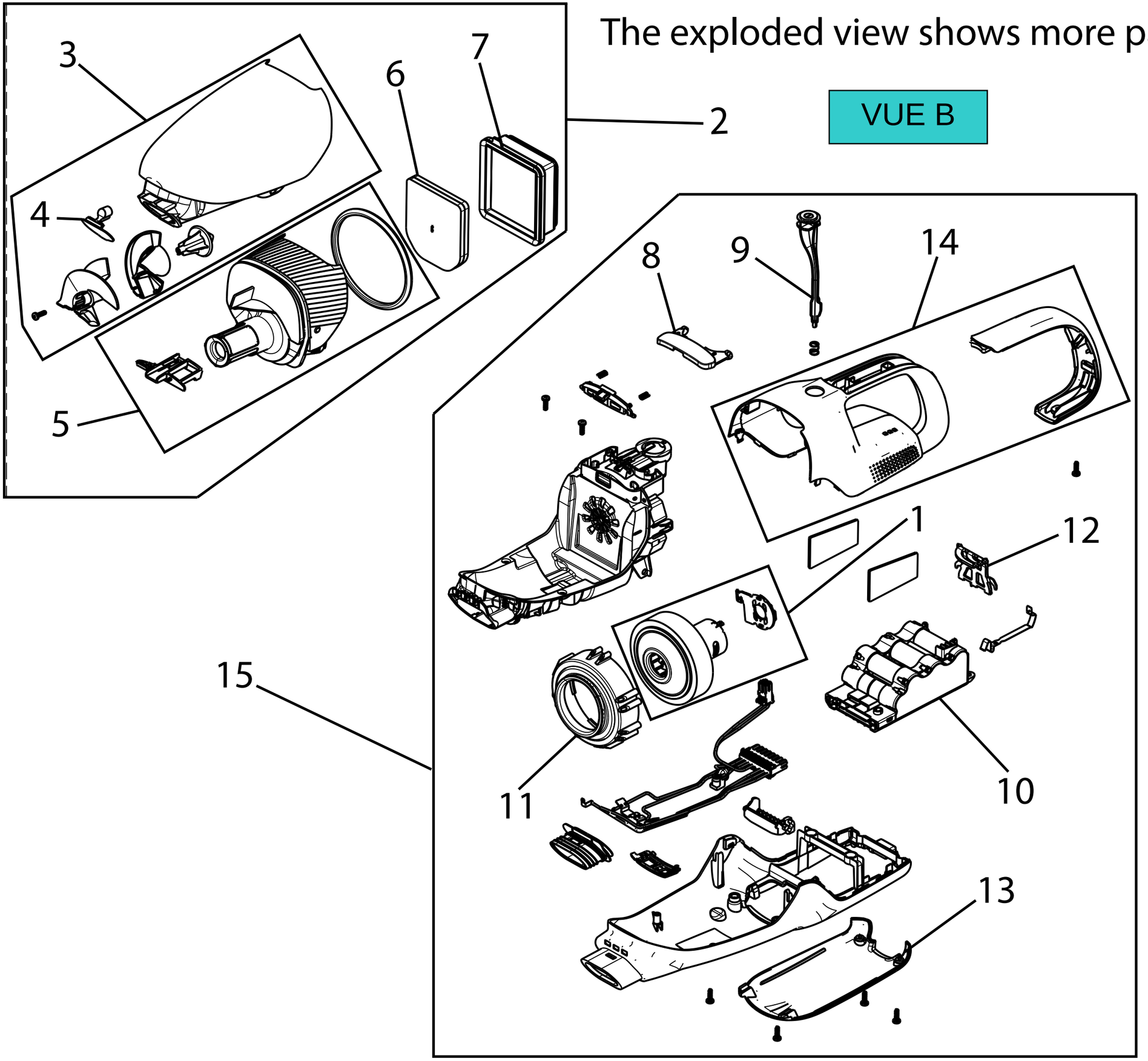

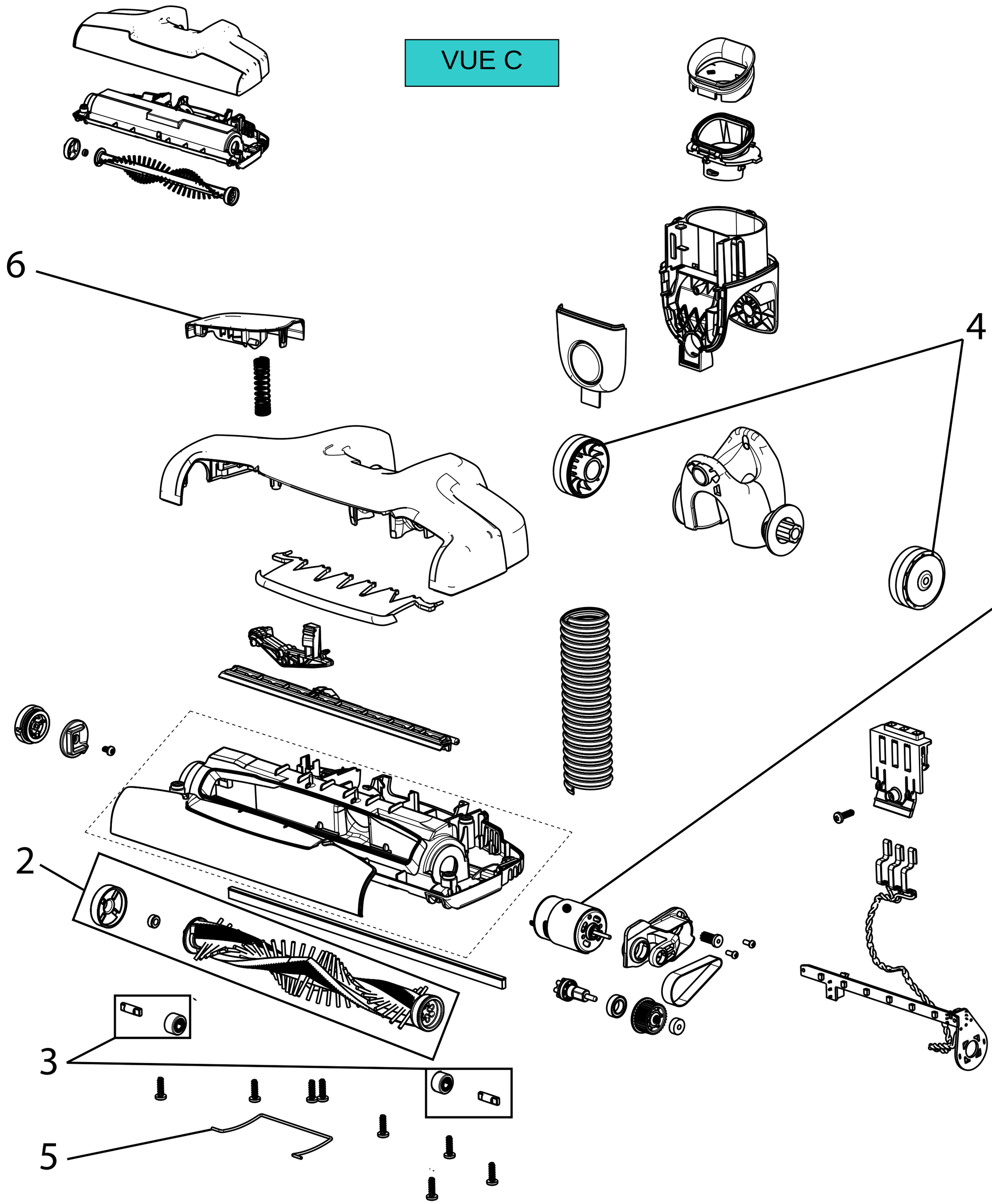
VUE C
6
4
1
2
3
5